RH Lighting Solutions
3155 West 33rd Street
Cleveland, OH 44109

Phone: 877-905-4448
Fax: 877-428-3080
www.rhlightingsolutions.com

Grand Series 24" Hemispheres

150 - 400 watts
PSMH | HPS

Job Name:	
Type:	Quantity:
Catalog No:	
Notes:	

APPLICATION: This unit provides, well-shielded lighting for parking lots, auto dealerships, outdoor areas, walks and roadways.

LAMPS: 18" unit up to 175W HID, 24" unit up to 400W HID. Lamps are operated in the horizontal position.

BALLAST: High power factor type core and coil with a minimum starting temperature of -20°F.

SOCKET: Heavy-duty glazed porcelain, pre-wired, with an enclosed screw shell and spring-loaded center contact, pulse rated for HPS units. Mogul base

HOUSING: High-strength spund aluminum that resists corrosion.

REFLECTOR: High-efficiency pre-finished aluminum, readily removable for access to the ballast tray, snap-fits into a continuous flange for easy installation and maintenance. Available in IES Types II or IV light distribution

FINISH: The housing is finished in a superior baked-on powder coating, allowing the fixture to withstand extreme weather changes without cracking or peeling. Optional colors available.

LENS: Clear, flat tempered glass double sealed into a hinged die-cast aluminum door frame. Captive latching allows for easy lamp.

MOUNTING: Standard units are provided with an extruded aluminum arm for pole or wall mounting. Optional Yoke or Spider Mounting options are avaiable.

LISTING: ETL, CSA-US Listed for Wet Locations.

EPA Chart					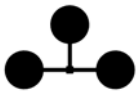			
Mounting Configuration	Strut or Yoke	Single Arm Mount	Double @ 90°	Double @ 180°	Triple @ 90°	Quad @ 90°	Triple @ 120°	Double Parallel (Requires PMB)
EPA	2.1 FT^2	2.5 FT^2	4.6 FT^2	4.9 FT^2	7.0 FT^2	7.0 FT^2	6.8 FT^2	4.4 FT^2

Fixture Number	Mounting Style	Wattage	Voltage	Color Finish	Options / Accessories
GR242 Type 2 Reflector GR244 Type 4 Reflector	A Standard Arm Mount S Spider Mount Y Yoke Mount	150PSMH 250PSMH 320PSMH 350PSMH 400PSMH 150HS 250HS 400HS	120 120 Volt (1) 208 208 Volt (1) 240 240 Volt (1) 277 277 Volt (1) 347 347 Volt (1,2) 480 480 Volt (1) MT 120/208/240/277 Volt Mutli Tap CMT 120/277/347 Volt(2) Candian Mutli Tap	TWT Textured White TBZ Textured Bronze TBK Textured Black	SF Single Fuse (120V, 277V or 347V only) Must Specify Voltage DF Double Fuse (208V, 240V or 480V only) Must Specify Voltage PCR Factory Installed Twist-Lock Photocell Must Specify Voltage EHS External House Side Shield RPA Round Pole Adapter PMB Parallel Mounting Bar

Order Example - Select Items from Above Columns to Build Catalog Number

GR242	A	400PSMH	277	TBZ	PCR

Notes: (1) Factory may use multi tap ballast wired to specified voltage.
(2) Canadian Voltage.

GRA24

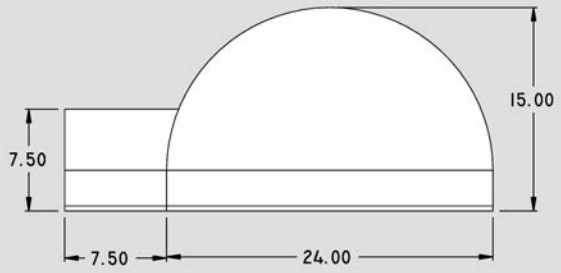

GRS24

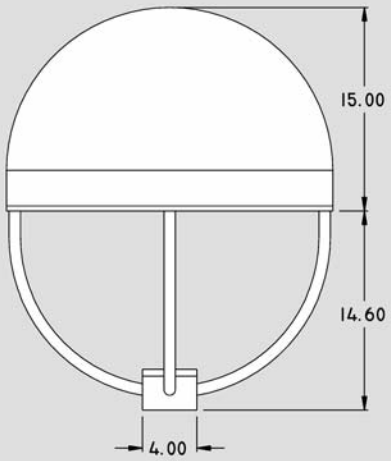

GRY24

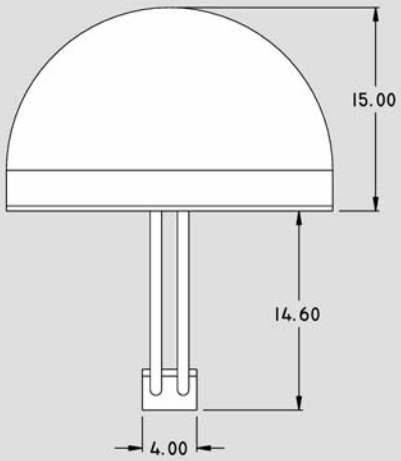

MADE IN USA ◆ © 2010 RH Lighting Solutions ◆3155 West 33rd Street, Cleveland, OH 44109
www.rhlightingsolutions.com ◆ Phone: 877-905-4448 (877-90-LIGHT) ◆ Fax: 877-428-3080